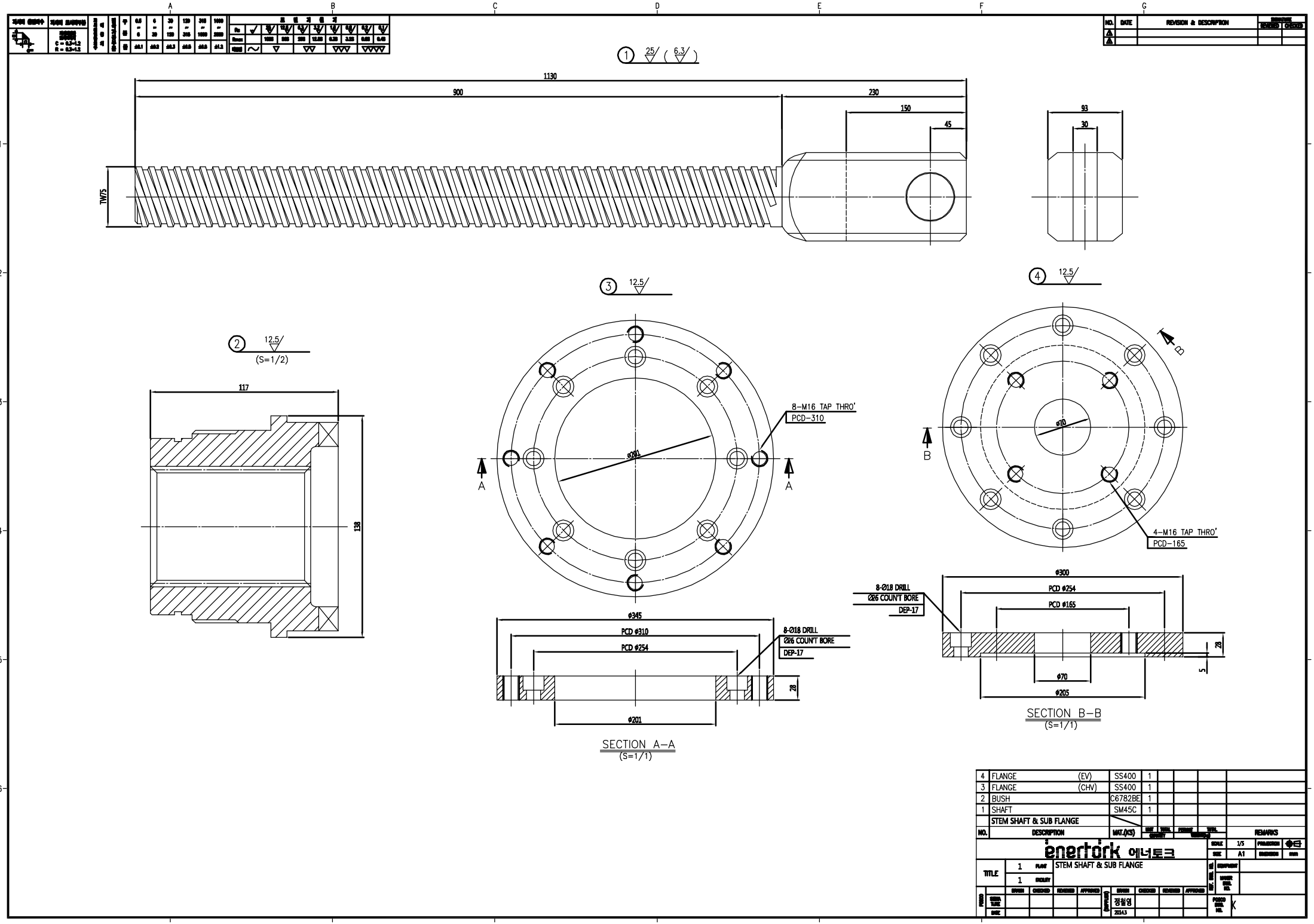

1 25 (6.3)
1130
900
230
150
45
93
30
TW75
2 12.5
(S=1/2)
117
138
3 12.5
8-M16 TAP THRO'
PCD-310
ø201
A
A
ø345
PCD ø310
PCD ø254
8-Ø18 DRILL
Ø26 COUN'T BORE
DEP-17
28
ø201
SECTION A-A
(S=1/1)
4 12.5
B
B
ø70
4-M16 TAP THRO'
PCD-165
ø300
PCD ø254
PCD ø165
8-Ø18 DRILL
Ø26 COUN'T BORE
DEP-17
28
5
ø70
ø205
SECTION B-B
(S=1/1)
4 FLANGE (EV) SS400 1
3 FLANGE (CHV) SS400 1
2 BUSH C6782BE 1
1 SHAFT SM45C 1
STEM SHAFT & SUB FLANGE
NO. DESCRIPTION MAT.(KS) REMARKS
enertork 에너토크
SCALE 1/5
SIZE A1
TITLE 1 FLAT STEM SHAFT & SUB FLANGE
1 FACILITY
DRAWN CHECKED REVIEWED APPROVED
정철영
2014.3
POSCO DWG. NO. K